MoviSight

MS-7PL-V1

Megaphone Mount

Specifications

	MS-7PL-V1
Camera	
Image Sensor	1/2.8" Progressive Scan CMOS
Pixels	2.0 Megapixel
Min. Illumination	Color: 0.001lux @ F1.6 B/W: 0.0001lux @ F1.6
Digital Noise Reduction	3D noise reduction
Digital Defog	Supported
Shutter Speed	1 ~ 1/30,000S
Lens	
Focal Length	8mm
Angle of View	48°
Min. Object Distance	40mm
Video	
Compression	H.265 / H.264 / MJPEG
Image Resolution	Main stream: 1080p Secondary stream: D1
Frame Rate	Main stream: 1080p@30fps Secondary stream: D1@30fps
Storage	Up to 128GB Micro SD card, 32GB by default
Loudspeaker	
Max. acoustic pressure	125dB
Max.Power	30W
Volum Control	Supported by ground station
Frequency	350Hz-5KHz
Sensitivity	Up to 128GB Micro SD card, 32GB by default
Pan and Tilt	
Precision	±0.01°
Anti-vibration Axis	2 Axis
Pan / Tilt Range	Pan range: 360° Endless
Pan / Tilt Speed	Pan speed: 200°/s
Environmental	
Operating Temperature	-20°C ~ 60°C / -4°F ~ 140°F
Operating Humidity	10% ~ 95%
Storage Temperature	-20°C ~ 70°C / -4°F ~ 158°F
Electrical	
Power Consumption	Max. 7W
Mechanical	
Weight	0.6kg / 1.33lb
Dimensions	189 × 160 × 174mm / 7.45" x 6.30" x 6.85"

Features

High Stability Design
- All-aluminum structure design, light and sturdy, good heat dissipation
- Biaxial stabilization
- ±0.01° image stabilization accuracy

High Performance
- Megaphone has 500m maximum distance
- Strong anti-interference
- Up to 15 km audio data transmission distance with low latency

Dimensions
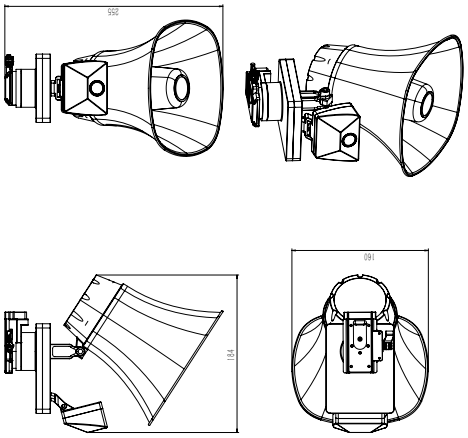
Units:mm